Project Phase 2: Wind Turbine System with MPPT Algorithm

ECE 128B Renewable Energy & Power Grid

Professor: Dr. Reza Esmaili

March 13th, 2026

Barry Leung

A18484227

Charlie Frank

A16928173

Nolan Sim

A17434835

Table of Contents

Table of Contents 2
Introduction 3
Problem Definition 5
Solution 7
Figure 1: Ideal wind turbine Psim schematic, parameter sweep of Vwind for values of 8, 12, and 16 m/s utilized 7
Figure 2: Shaft speed vs power output for ideal wind turbine where Po_01 is at Vwind = 8 m/s, Po_02 is Vwind = 12 m/s, Po_03 is Vwind = 16 m/s 8
Table 1: Ideal wind turbine characteristics at specific wind speeds 8
Figure 3: Constant torque speed control schematic 9
Figure 4: ωref vs ω speed tracking for the constant torque schematic for gain of 0.8, 0.9, and 1 and Tau values of 0.01 or 0.02 9
Figure 5: ωref vs ω speed tracking for the constant torque schematic for gain of 0.8 and tau of 0.02. 10
Table 2: Gain and Tau values for constant torque speed control testing 10
Figure 6: Speed control with wind turbine schematic 11
Figure 7: Wind Turbine ωref vs ω speed tracking for 12m/s wind and ωref of 190 rad/s 12
Table 3: Constant Torque and Wind Turbine speed control circuits comparative control response. 12
Figure 8: Speed control with wind turbine and MPPT schematic 13
Figure 9: P&O MPPT Method inside of C-block 13
Figure 10: ωref vs ω and Po with MPPT with windspeed at 12m/s 14
Table 4: Speed overshoot, settling time, and steady state power using MPPT with windspeed of 12m/s 14
Figure 11: ωref vs ω and Po for change in wind speed from 12/ms to 8m/s 15
Table 5: Speed overshoot, settling time, and steady state power using MPPT with windspeed of 12m/s to 8m/s 15
Conclusion 16

Introduction

The second phase of the ECE 128B course project will focus on the design and simulation of a wind energy conversion system that will efficiently convert wind into electrical power for the charging of a battery. The system will utilize an interleaved three phase buck boost converter, a three phase permanent magnet generator and full wave diode rectifier, as well as a maximum power point tracking (MPPT) algorithm, to ensure maximum and stable operation of the energy conversion. PSIM software simulations will be used as the primary tool to model and test the design of the system and report the performance results. With the MPPT algorithm, the wind turbine system is able to determine efficient and stable turbine operating points to maximize power production and transfer in varying wind conditions.

The active control system utilizing the MPPT algorithm will seek the maximum operating points via the Perturbation and Observation (P&O) method. P&O allows the algorithm to read reference values for the angular speed and torque of the turbine to determine the present power output. By modifying the angular speed of the turbine, the perturbation, and then observing how the power output of the turbine changes, the algorithm will adjust the reference angular speed of the turbine to seek peak power output in the given wind conditions. The three-phase AC output of the generator is first converted to DC via a rectifier bridge before entering the three phase interleaved Buck-Boost stage. These reference values will be sent through a proportional integral (PI) controller loop to generate duty cycle commands for the pulse width modulation (PWM) signals that control the converter switches. Through this control setup, the system will ensure optimal energy output while maintaining stable battery charging. A three phase interleaved Buck-Boost converter will be used, as it allows both step up and step down voltage variation while also improving thermal management and reducing current ripple within the system.

System validation will be completed by analyzing the angular velocity and output power of the turbine compared to an ideal system's behaviors, along with analysis of the systems dynamic response capabilities and steady state behavior. This system should be able to quickly and accurately find new operational setpoints to maximize output power. Without a control setup like this a turbine setup could dramatically reduce power output in varying wind speeds, and also potentially pose a risk to the lifetime of the physical turbine if operations are especially poor and unresponsive. For the project team, learning how to optimize such power converters will be

essential to implementing renewable energy storage systems in real world applications, especially since wind power systems often have to deal with unpredictable and variable weather conditions where maximizing output power is essential for economic and reliable performance within the wider electrical grid.

Problem Definition

Phase 2 of this project will address the problem of maximizing power extraction from a wind turbine under varying wind conditions and transferring this power to charge a 100V battery. The system will utilize an interleaved three phase buck boost converter, a three phase permanent magnet generator, full wave diode rectifier, as well as a P&O MPPT algorithm to achieve this goal. By dynamically adjusting system parameters this project will also avoid major losses in energy production that would occur without an active control scheme

The design process will begin with a simplified schematic that assumes ideal operating conditions. The system will develop progressively using smaller building block schematics. This approach allows for subsystems to be validated before implementing them into the complete system.The steps for the project will be finding, the shaft speed versus power characterization, testing speed control with constant torque block, speed control with a turbine model, and lastly the implementation of the MPPT method turbine model.

The first stage will involve characterizing the turbine power output at multiple wind speeds in an ideal scenario. This will involve a schematic that sweeps through the turbine's angular velocity range of and will output power to a generalized mechanical load that does not yet represent our battery load. The resulting power curves allow identification of the maximum power points at each wind speed and the corresponding turbine angular velocity.

The next stage will introduce a closed loop angular speed control system that tracks the maximum power point assuming a constant torque. In this schematic the turbine is simplified as a constant torque generator and the angular speed is controlled using the P&O MPPT method. Following this stage , a more complete schematic will be created that utilizes the turbine model, the angular speed control, and the interleaved buck converter. The objective at this stage will be to implement the previously developed angular speed control with the turbine block. Finally an updated P&O MPPT method will be implemented into the schematic that will track reference angular speeds to maximize power output.

Several restrictions should be considered while designing a MPPT method such as the specifications of turbines and the limitations of max angular speed and torque. In this design the turbine is rated for an output of 20 kW and a speed of 211 rotations per minute. The turbine

outputs will be connected to a permanent magnet generator, which has a stator resistance of 0.1764 Ohms. Since system parameters may vary between different turbine and generator models, the MPPT parameters used in this system may need to be adjusted to work with other systems. Additional constraints arise from the electrical conversion stages needed for this application. A 3 phase rectifier is required to convert the AC output of the turbine to DC power, while an interleaved buck converter is needed to match the charging parameters of the 100V battery.

Solution

The wind turbine MPPT system and the various model stages shown below are all designed and simulated in PSIM. The final circuit is composed of the turbine, generator, and rectifier component, the Buck-Boost converter stage with the battery system, and the control system which has the MPPT algorithm for speed control. All components of the simulated system are necessary to ensure proper functionality aligned with the project goals. The development process for the final model begins with analyzing an ideal wind turbine setup to determine ideal maxima for the angular velocity of the turbine and power output at a selection of wind speeds.

Shaft Speed vs Power for wind speeds of 8, 12, and 16m/s

The model in Figure below 1 shows the circuit setup used for this analysis, with turbine characteristics from the project outline used and a parameter sweep function varying the value of the Vwind term to run multiple simultaneous simulations in the program. The results of running the program are shown in Figure 2 below, where the shaft speed versus power output of the turbine are shown for 3 wind speed scenarios. (8, 12, and 16 m/s) This clearly demonstrates that a maximum speed set point of the turbine exists for each wind speed to achieve maximum power output. The angular velocity and power output for each wind speed scenario are tabulated in Table 1, and are used in the final MPPT circuit of this project to validate the results of the algorithm. The mathematical model used by PSIM is largely based on Equation 1, seen below.

$$Equation\ for\ Po = \omega * T_{shaft} * \frac{2\pi}{180} \qquad \text{Eq. 1}$$

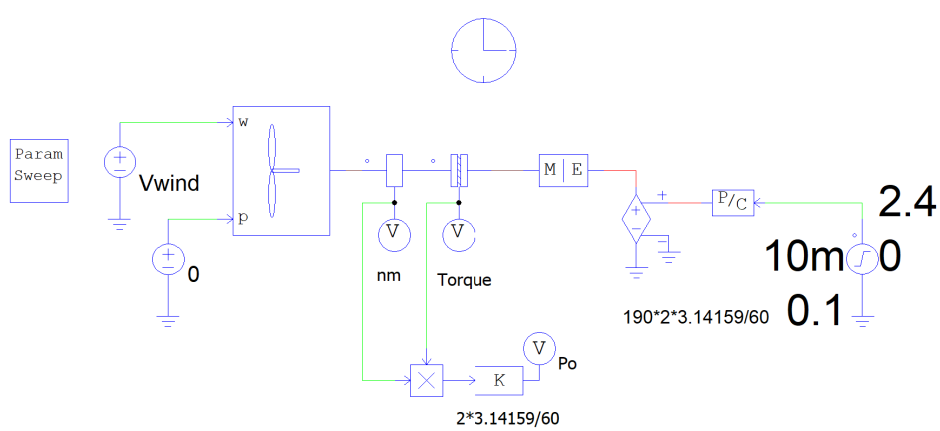

Figure 1: Ideal wind turbine Psim schematic, parameter sweep of Vwind for values of 8, 12, and 16 m/s utilized.

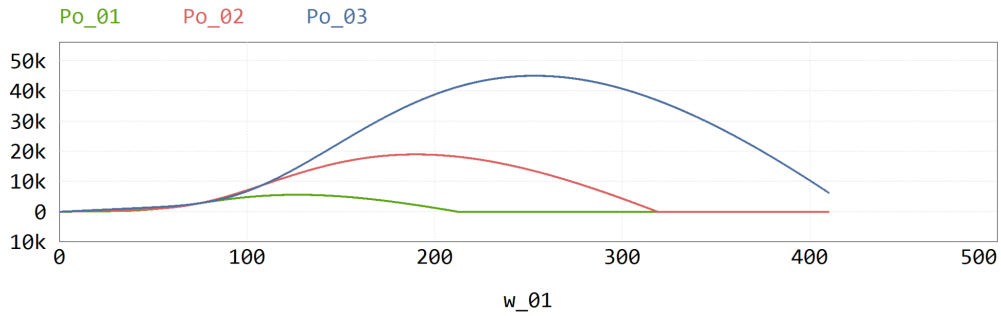

Figure 2: Shaft speed vs power output for ideal wind turbine where Po_01 is at Vwind = 8 m/s, Po_02 is Vwind = 12 m/s, Po_03 is Vwind = 16 m/s

Table 1: Ideal wind turbine characteristics at specific wind speeds

Wind Speed (m/s)	Shaft Speed w (rad/s)	P_out maximum value (kW)
8	126.77	5.6316
12	190.06	19.0045
16	253.45	45.0451

Speed control with constant torque block

Next, a large amount of the circuit used in this project is implemented for the speed control testing. The three phase permanent magnet generator, diode rectifier, and interleaved Buck-Boost converter are put in sequence with a constant torque block outputting a constant torque of 80nm. A control circuit is also in this model, seen in Figure 3 below, with PI control loops for regulating the series of bi-directional switches in the converter to achieve an active control scheme responding to the reference speed value. That reference, labeled ωref in Figure 3, is a 2 step voltage source, which was used to test how well the control circuit can command the speed of the "turbine" simulated by the constant torque source. The PI values on the inner control circuit loop are kept constant and pulled from Phase 1 of this project, the speed control PI controller, labeled with gain of 0.8 and time constant 0.02 in Figure 3, was optimized through testing with varied gain and time constant parameters to maximize system responsiveness and stability.

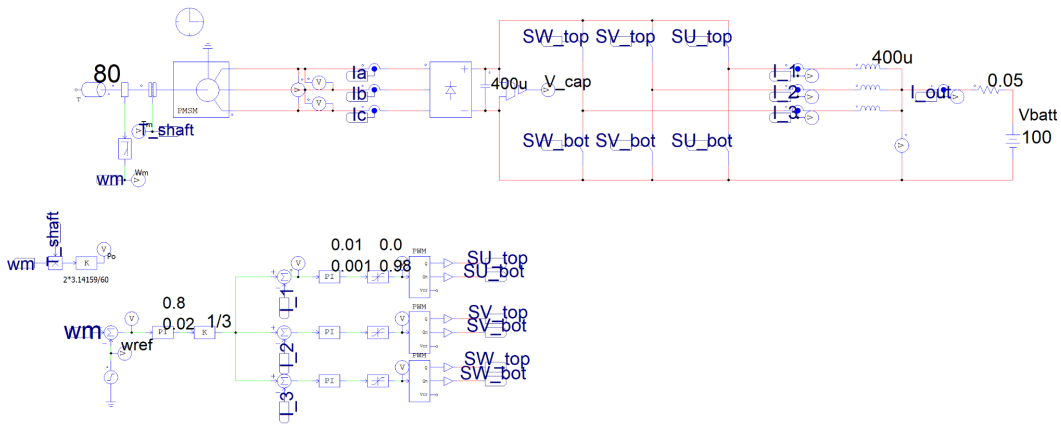

Figure 3: Constant torque speed control schematic

Testing to find the optimal gain and tau was completed using parameter sweep in PSIM and comparing overshoot and settling time for the angular speed value compared to the reference value set by the voltage input. Figure 4 below shows the top 6 candidate gain and tau values with gains of 0.8, 0.9, and 1 with each gain being shown with tau of 0.01 and 0.02.

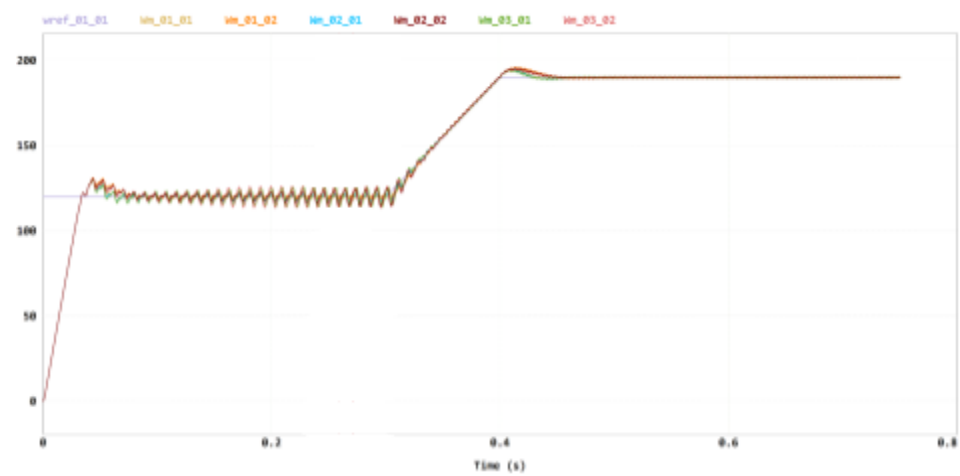

Figure 4: ωref vs ω speed tracking for the constant torque schematic for gain of 0.8, 0.9, and 1 and Tau values of 0.01 or 0.02

Tau was limited to values of 0.01 or 0.02 as greater values of tau resulted in larger lagging and too small values failed to allow responsiveness from the inner loop PI controllers. With gain at a value of 1, simulations boasted lower overshoot and settling time, oscillation at steady state was higher than that of lower gains, and the differences in overshoot and settling time were small enough that a gain of 0.8 and tau of 0.02 was determined to be optimal, as seen in Figure 5 below for its low overshoot, quick settling time, and small oscillations at steady state. (See testing values in Table 2, and equations for overshoot and settling time in equations 2 and 3)

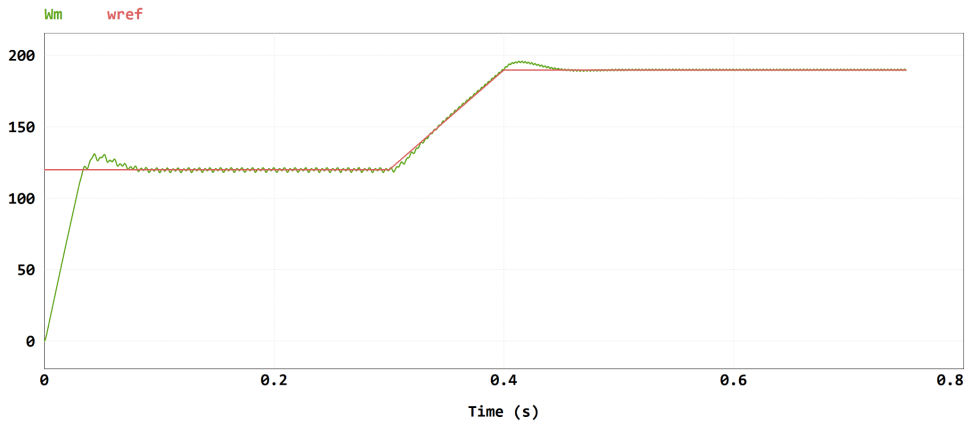

Figure 5: ωref vs ω speed tracking for the constant torque schematic for gain of 0.8 and tau of 0.02.

$$Speed\ Overshoot\ = \frac{Wm(max) - Wref(Steady\ state)}{Wref\ (Steady\ state)} \qquad \text{Eq. 2}$$

$$Settling\ Time\ =\ Time\ at\ steady\ state\ -\ Time\ at\ start\ of\ tracking \qquad \text{Eq. 3}$$

Table 2: Gain and Tau values for constant torque speed control testing

Gain	Time Constant (Tau)	Speed Overshoot	Settling Time
1	0.01	7.5%	0.102s
	0.02	8.333%	0.105s
0.9	0.01	5.00%	0.097s
	0.02	7.5%	0.097s
0.8	0.01	8.33%	0.089s
	0.02	9.16%	0.096s
0.7	0.01	9.16%	0.115s
	0.02	11.6%	0.119s
0.6	0.01	8.33%	0.126s
	0.02	10%	0.134s
0.5	0.01	10%	0.134s
	0.02	11.66%	0.138s
0.4	0.01	11.66%	0.198s
	0.02	13.33%	0.210s
0.3	0.01	14.1%	0.215s

	0.02	16.66%	0.228s
0.2	0.01	18.33%	>0.35s
	0.02	21.66%	>0.35s

Speed control with turbine

Next, the speed control schematic is copied, but instead of a constant torque block serving as the wind turbine, the wind turbine module is attached as the input, resulting in the circuit seen in Figure 6 below.

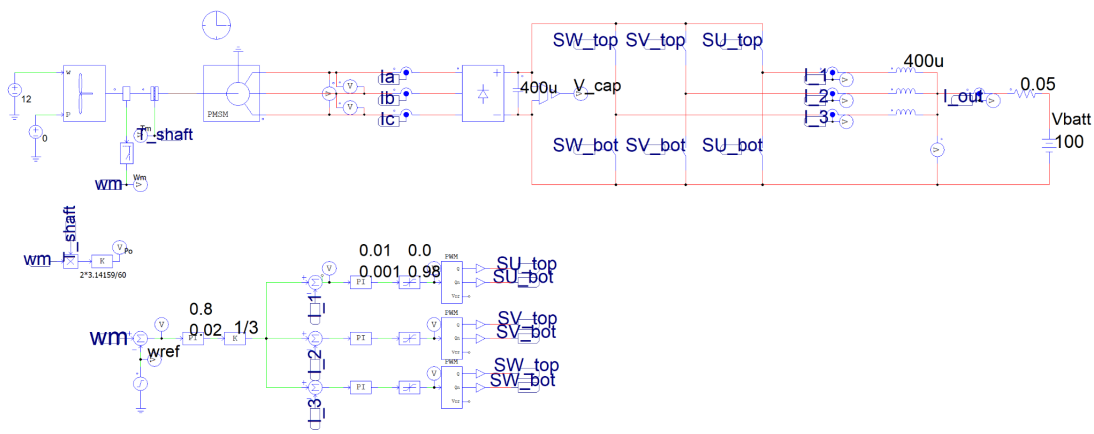

Figure 6: Speed control with wind turbine schematic

The turbine uses the same setup as the ideal turbine from the first circuit setup shown, and all PI controllers use the same gain and tau values. The PI controller output utilizes the standard PI control law of

$$e(t) = \omega_{ref} - \omega_m \qquad \text{Eq. 4}$$

$$u(t) = K_p e(t) + K_i \int e(t)dt \qquad \text{Eq. 5}$$

Where and K_p is the proportional gain and K_i is the integral gain. The circuit behavior demonstrating proper speed tracking for a 12 m/s input for the wind and 190 rad/s as the reference speed inputted to the control circuit is shown in Figure 7 below.

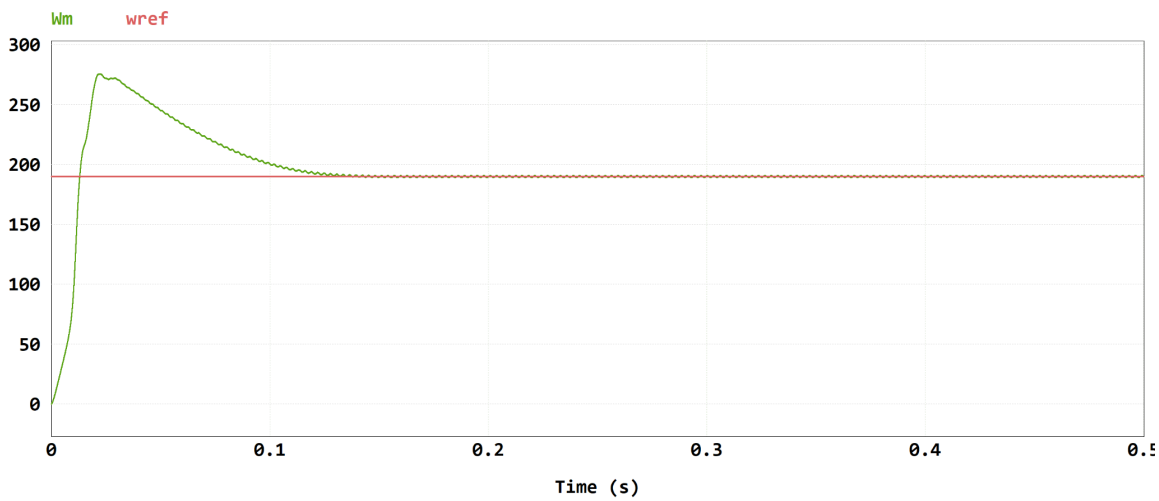

Figure 7: Wind Turbine ωref vs ω speed tracking for 12m/s wind and ωref of 190 rad/s

The change from a constant torque input to wind turbine input affects the overshoot and settling time of the control circuit. In Table 3 the comparative values between the wind turbine and constant torque speed control circuits are tabulated. It is seen that the wind turbine circuit is slower and has a much larger overshoot than the constant torque circuit. These differences aren't particularly alarming since the simulated wind turbine will be slower since there are more mechanical components and other parameters at play than a constant torque block. This means any attempts at control will take longer, and since this control circuit is fairly fast, it means the initial response is very large since the circuit can't see how the turbine responds until after a few iterations of the control loop.

Table 3: Constant Torque and Wind Turbine speed control circuits comparative control response

Circuit	Gain	Time Constant (Tau)	Speed Overshoot	Settling Time
Constant Torque	0.8	0.02	9.16%	0.095s
Wind Turbine	0.8	0.02	44.7%	0.147s

MPPT

Next, the schematic diagram from Figure 6 is largely copied, with the addition of the MPPT method, which is implemented into a C block. This tracks the angular speed and torque of the turbine to create a ωref value so the system tracks to the MPP.(Circuit setup seen in Figure 8.)

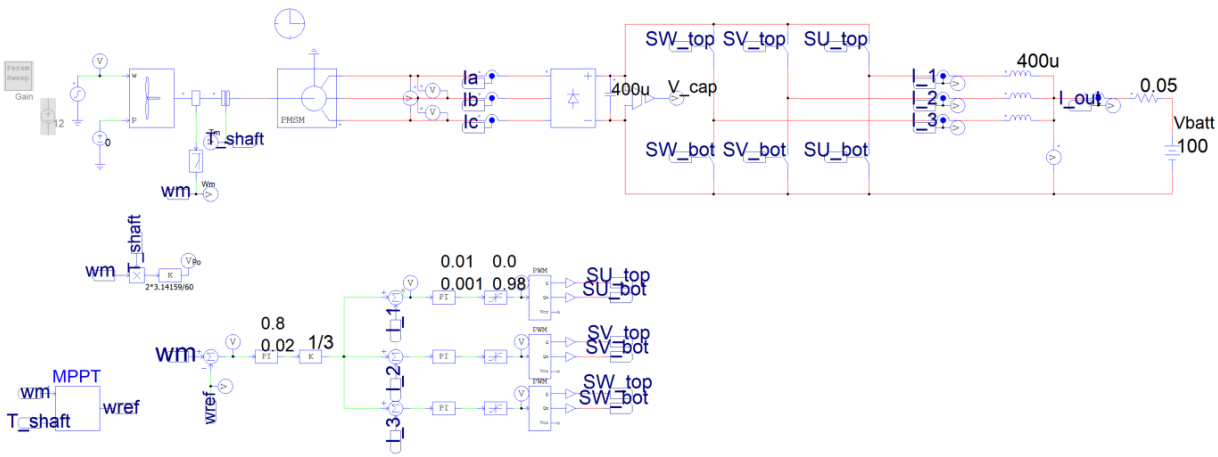

Figure 8: Speed control with wind turbine and MPPT schematic

The MPPT code implemented into the C block is displayed in Figure 9 below.

```
#include <Stdlib.h>
#include <String.h>
#include <math.h>

// GLOBAL vars
static float w_prev = 0.0;
static float P_prev = 0.0;
static float w_ref = 150.0;
static double last_update_time = 0.0;
// Tuning parameters
const float step = 1.5;
const float P_threshold = 0.5;
const float sample_time = 0.001;
void SimulationStep(
    double t, double delt, double *in, double *out,
    int *pnError, char * szErrorMsg,
    void ** reserved_UserData, int reserved_ThreadIndex, void * reserved_AppPtr)
{
    float w_m_rpm = (float)in[0];
    float T_m = (float)in[1];
    float w_rads = w_m_rpm * 0.104719755f;
    float P_m = w_rads * T_m;
    if (t - last_update_time >= sample_time) {

        float P_diff = P_m - P_prev;
        float w_diff = w_m_rpm - w_prev;
        if (fabs(w_diff) > 0.05) {
            if (P_diff > 0) {
                if (w_diff > 0) w_ref += step;
                else w_ref -= step;
            } else if (P_diff < 0) {
                if (w_diff > 0) w_ref -= step;
                else w_ref += step;
            }
        }
        P_prev = P_m;
        w_prev = w_m_rpm;
        last_update_time = t;
    }

    if (w_ref < 10.0) w_ref = 10.0;
    if (w_ref > 300.0) w_ref = 300.0;

    out[0] = (double)w_ref;
}

void SimulationBegin(
    const char *szId, int nInputCount, int nOutputCount,
    int nParameterCount, const char ** pszParameters,
    int *pnError, char * szErrorMsg,
    void ** reserved_UserData, int reserved_ThreadIndex, void * reserved_AppPtr)
{
    w_prev = 0.0;
    P_prev = 0.0;
    w_ref = 150.0;
    last_update_time = 0.0;
}
```

Figure 9: P&O MPPT Method inside of C-block

This code utilized equations 2 and 3 to find the change of power and change in angular speed for each iteration.

$$\Delta P = P_{new} - P_{old} \qquad \text{Eq. 6}$$

$$\Delta\omega = \omega_{new} - \omega_{old} \qquad \text{Eq. 7}$$

The perturb and observe method determines if the operating point is moving towards or away the maximum power point. If the power increases after a perturbation of ω then the perturbation will continue in this direction. When a perturbation of ω results in power decreasing, the perturbation will reverse direction. There are threshold values for a how large the change in power and the change in ω must be, this prevents unnecessary oscillation when steady state is reached.

The MPPT is first validated with a constant input of 12m/s wind speed . The MPPT tracks the optimal power point by adjusting the angular velocity of the turbine. The plots of the angular velocity tracking to the reference value and the output power are displayed below in Figure 9. The performance of the MPPT is determined by the percent overshoot of the speed, settling time, and the steady state power which are tabulated in Table 4. Comparing the steady state power output using MPPT to the values from Figure 1 validate that the max power set point is nearly reached.

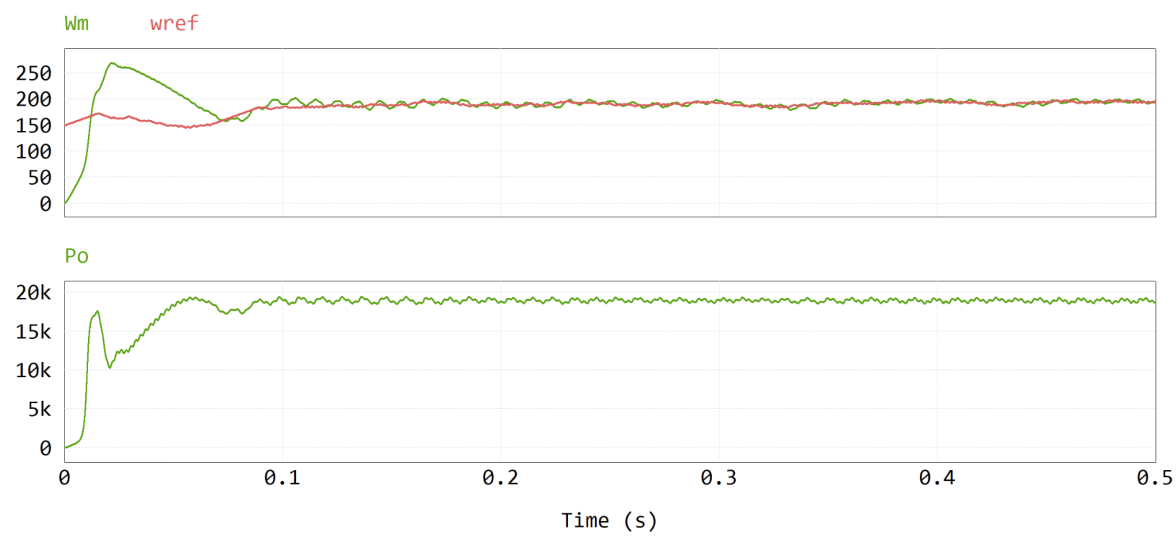

Figure 10: ωref vs ω and Po with MPPT with windspeed at 12m/s.

Table 4: Speed overshoot, settling time, and steady state power using MPPT with windspeed of 12m/s

Windspeed	Gain	Time Constant (Tau)	Speed Overshoot	Settling Time	Steady State Power
12m/s	0.8	0.02	64.42%	.0703s	18.84KW

The MPPT is then validated by introducing a step in the wind speed from 12m/s to 8m/s. As a result the MPPT tracks to two different set points as seen in Figure 1 below.

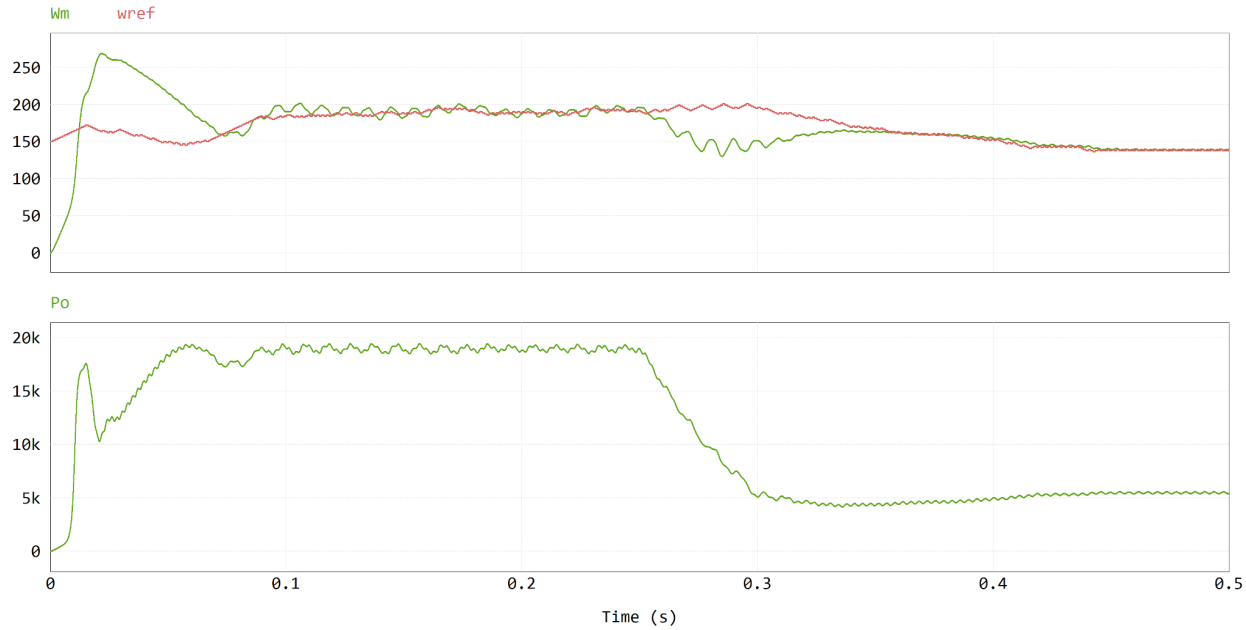

Figure 11: ωref vs ω and Po for change in wind speed from 12/ms to 8m/s

The performance of the MPPT is outlined in Table 5 below with tabulated values for both the 12m/s wind speed and the 8m/s wind speed. The MPPT algorithm initially overshoots the optimal angular speed at 12m/s and during the transition to a wind speed of 8m/s undershoots the optimal angular speed. Comparing the steady state values from both steady state set points found in Table 5 to Table 1, reveal that the MPPT successfully tracks to the max power setpoint for both the 12m/s and 8m/s wind speeds after steady state has been achieved with minimal variation from the optimal system. (A 0.18% and 1.62% difference respectively)

Table 5: Speed overshoot, settling time, and steady state power using MPPT with windspeed of 12m/s to 8m/s

Windspeed	Gain	Time Constant (Tau)	Speed Overshoot	Settling Time	Steady State Power
12m/s (0.0s to. 25s)	0.8	0.02	62.42%	.110s	18.97KW
8m/s (.25s to .50s)	0.8	0.02	-34.67%	.124s	5.54KW

Conclusion

Phase 2 of this project successfully showed the implementation of a Perturbation and Observation (P&O) MPPT algorithm into a wind energy conversion system. By using an interleaved Buck-Boost converter as well as a three-phase magnet generator, the system converts variable wind energy into stable DC power for battery charging. The project went from fixing an ideal shaft speed vs. power characterization, into controlling speed with a constant torque block and turbine, to finally a full wind turbine model with MPPT. By splitting the approach into parts, each section was able to be validated systematically. Some key results that came from simulations demonstrated ideal characterization, controller optimization, MPPT performance, and dynamic response. For ideal characterization, maximum power points for wind speeds for 8, 12, and 16 m/s were found (5.63 kW @ 126.77 rad/s, 19.00 kW @190.06 rad/s, 45.05 kW @ 253.45 rad/s respectively). It was also determined that a PI controller with a gain of 0.8 as well as a time constant of 0.02 was the best optimization in order to balance overshoot and quick settling times. The algorithm was able to track the maximum power setpoints for both dynamic and steady-state conditions. To be specific, the system is able to reach a steady-state maximum power output of 18.97 kW for a 12 m/s wind speed, demonstrating that the theoretical maximum was found. Finally, the system was able to accurately respond to a wind speed step from 12 to 8 m/s, finding the new operating setpoints in only 0.165s to continue optimal operation of the turbine and charging. Together with the addition of the MPPT algorithm, the turbine was able to reach peak efficiency despite varying weather conditions. These concepts are essential to the usage of renewable energy systems in the real world and future grid.

Each team member contributed significantly to this project's success including circuit design, data collection, background research and report writing. Charlie was responsible for the primary circuit architecture in PSIM, including the ideal turbine, constant torque, and speed control schematics. He was in charge of the introduction and the solutions section in regard to the ideal turbine characterization. Nolan completed the problem definition portion and the MPPT solutions section of the report, as well as aiding with running the dynamic simulations and inserting the guiding equations into the report. Barry helped in the development of the MPPT PSIM schematic, as well as testing for optimal controller setpoint values and varied wind speed scenarios. He also completed the conclusion section of the report.